Assembly Instruction Sheet #S-1 262P22
For Style 1262P22

Tools Required: Flathead screwdriver, Philips screwdriver, pliers, wire cutters, wire strippers, electrical tape, safety glasses.
Light Source: (5) 120V LED *1W DIMMABLE (3000K)
Estimated Assembly Time: 10-20 minutes
Preparation: Identify and inspect all parts before beginning installation. Check package content list and diagrams below to be sure all parts are present. If any parts are missing or damaged, do not attempt to assemble, install, or operate the fixture. Contact customer service for replacement parts.

⚠Warnings and Cautions

Turn off electricity at circuit breaker or main fuse box before installation. Consult a licensed electrician if in doubt.
These instructions are provided for your safety. It is very important you read them completely before installing the fixture.
We strongly recommend that a licensed, professional electrician perform the installation.
Disconnect fixture from power source before replacing bulbs. Make sure bulbs are given sufficient time to cool before removal.

Package Contents

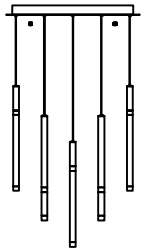

A Fixture Body x1

Hardware Contents

PART	DESCRIPTION	QUANTITY
BB	Wire nut	2pcs
CC	Outlet Box Screw	2pcs

STEP 1- Release Crossbar from Ceiling Canopy .

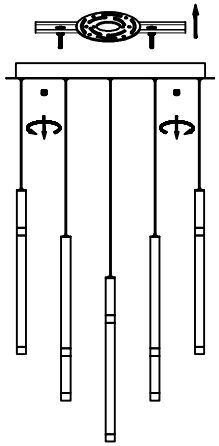

Figure 1

ReleasedDate:2017-08-14

STEP 2 – Attach Crossbar to Outlet Box.

A.Pass the supply wires through the Crossbar (EE). Attach the Crossbar (EE) to the Outlet Box (CC) with the head of the Green Ground Screw facing you. Secure it with Outlet Box Screws (not included).Tighten until snug.

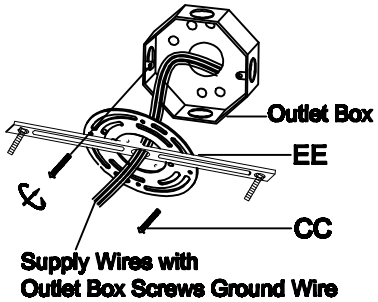

Figure 2

STEP 3 – Wire Connections

A. Use standard wire connectors (not included) to make all wire connections. Twist connectors until wires are tightly joined together. Wrap each connection with approved electrical tape and carefully stuff all the connected wires into the Outlet Box.

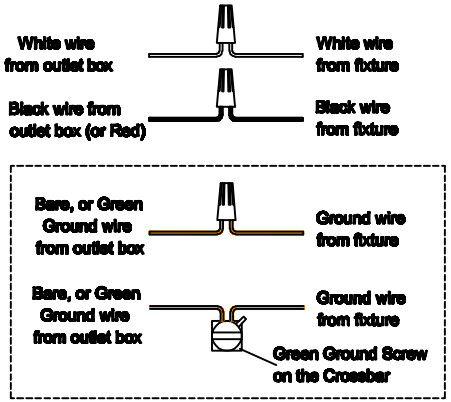

Figure 3

STEP 4 – Install Ceiling Canopy to Ceiling

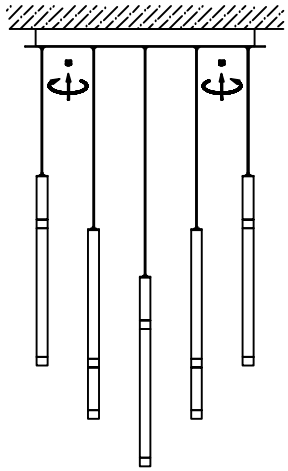

Figure 4

ReleasedDate:2017-08-14