4348

120V

Catalog #:		Type
Project:		Date
Prepared by:		

LED Surface Mount

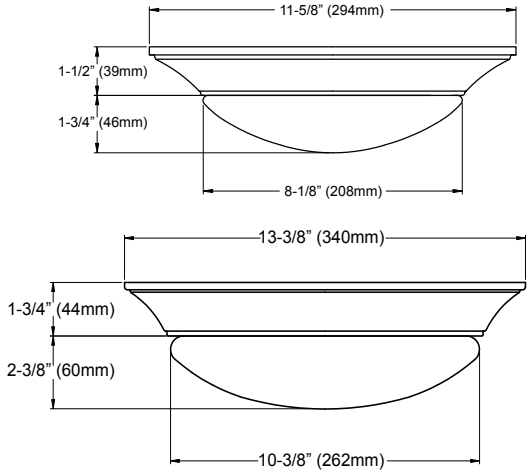

DESCRIPTION

Contemporary, clean and cool, this minimal take on a classic LED Surface Mount incorporates the popular styling of the large round surface mount bowl fixture without the extra finial hardware under the glass. The threaded glass simply secured by twisting in place after installation. A stylish, affordable, and efficient accent to any contemporary space.

DESIGN FEATURES

Construction
- Heavy duty, steel construction
- Key-hole slots for surface mounting

Electrical
- Operating voltage AC120V-60Hz
- Dimmable, long life LEDs
- Suitable for use in damp locations
- 50,000 hour projected life
- Available in 11" or 13"
- 11" | 1400Lm | 15W | 93.3Lm/W | CRI 82
  13" | 2000Lm | 25W | 80.0Lm/W | CRI 83
- Power Factor: 1.0
- Available in 3000K

Installation
- Quick and easy, one-person ceiling mount installation

Lens
- Finial-free, threaded frosted opal glass

Finish
- Available in brushed nickel, oil rubbed bronze, and white

Certifications
- Energy Star
- cETLus for damp location
- 5 year limited warranty

ORDERING

Example: 4348BN-11

Model #	Finish			Size
4348				
4348 LED Surface Mount	**BN** **OB** **WH**	: : :	Brushed Nickel Oil Rubbed Bronze White	**-11** **-13**

TEL: 800.937.6925 | Fax: 800.207.9509 | www.rplighting.com

Specifications and dimensions subject to change without notice.

RP | LIGHTING · FANS